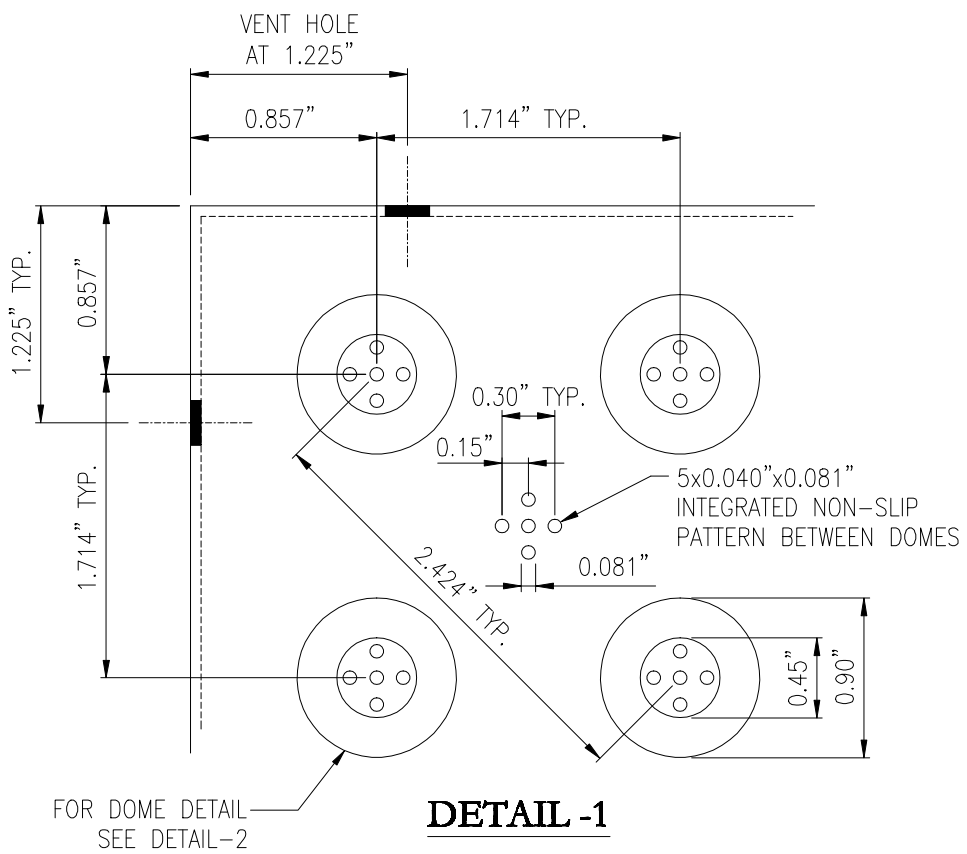

DETAIL -1

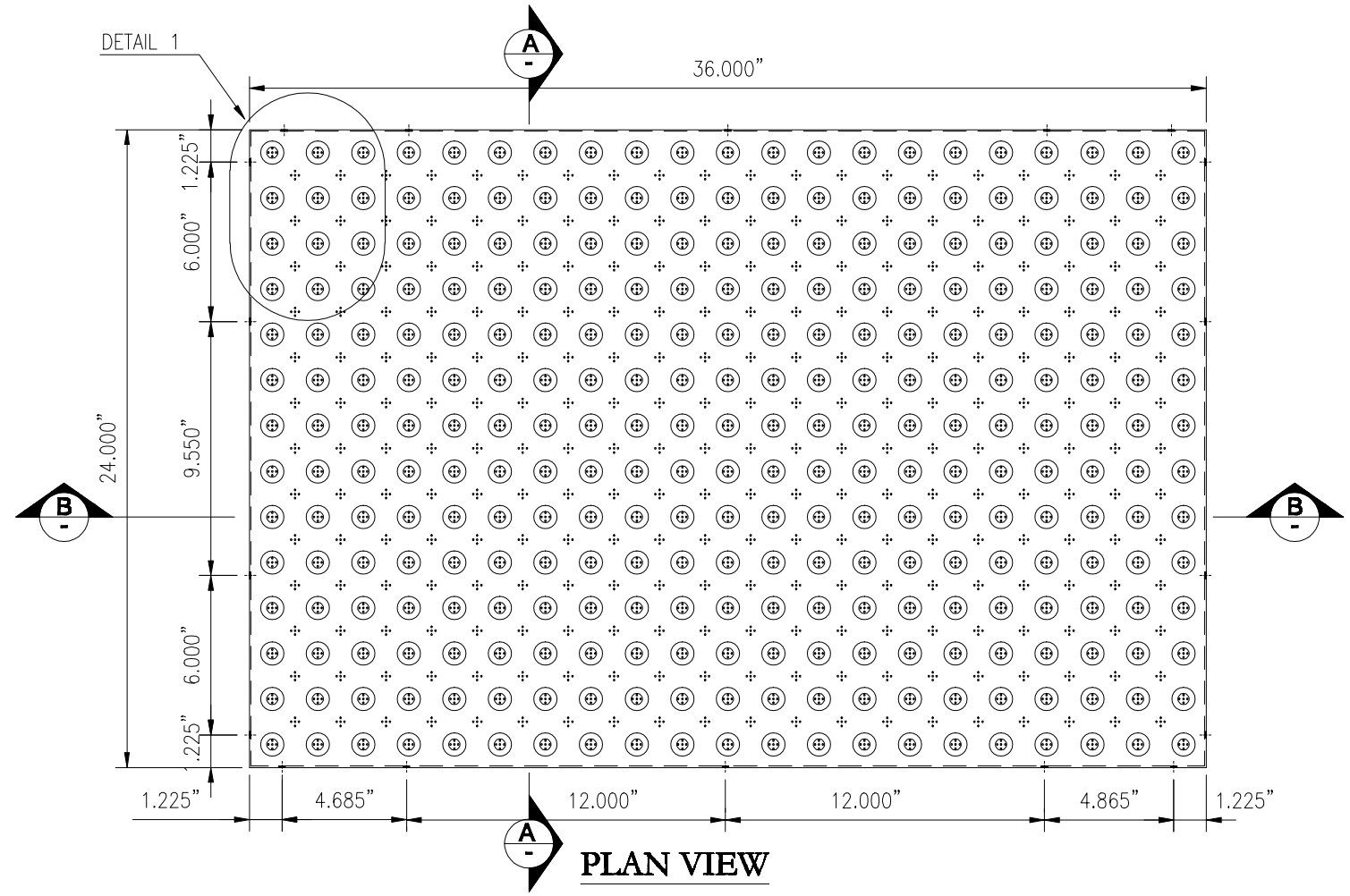

PLAN VIEW

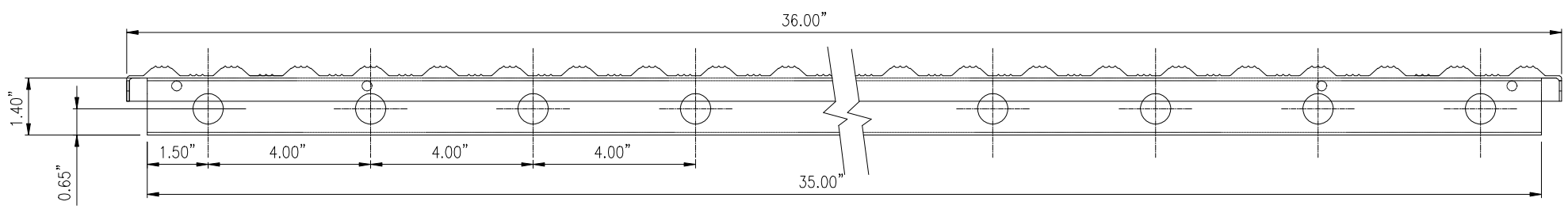

SECTION B-B

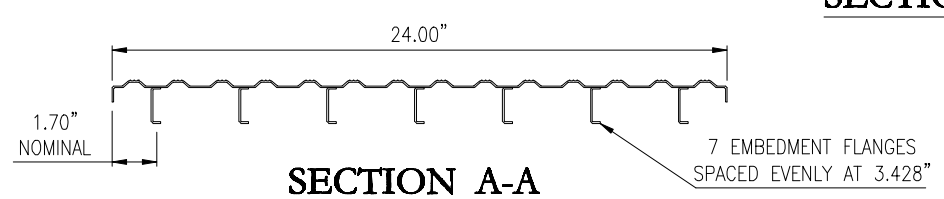

SECTION A-A

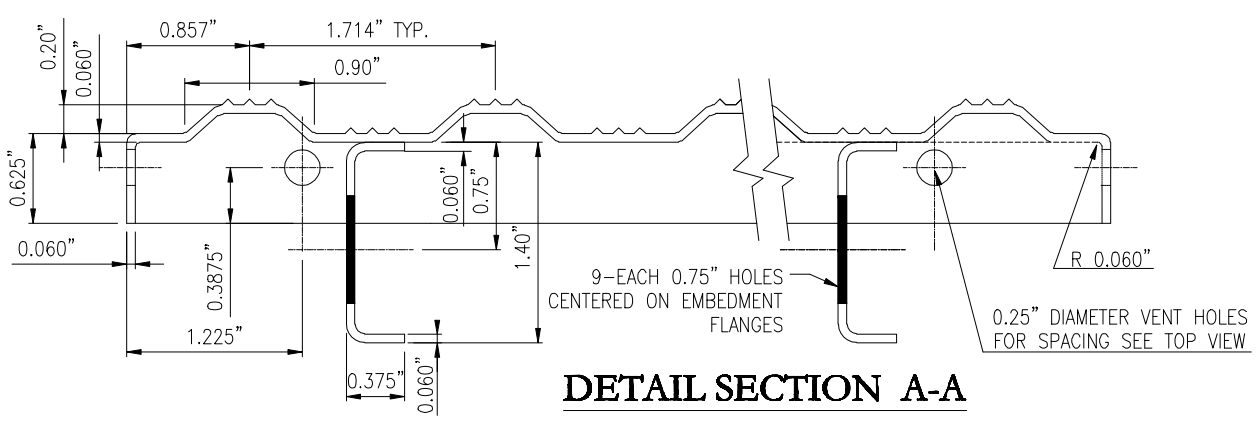

DETAIL SECTION A-A

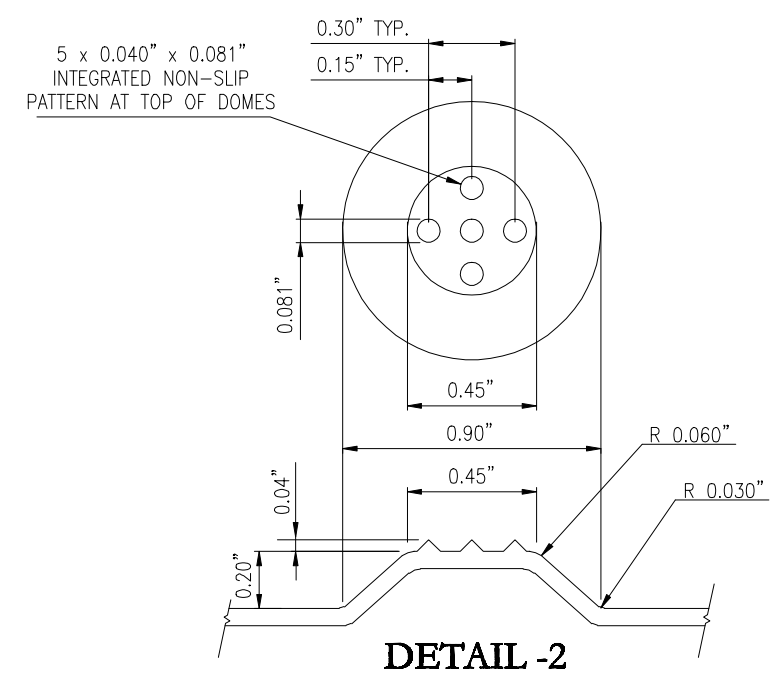

DETAIL -2

Advantage Tactile Systems™

© 2007 ADVANTAGE TACTILE SYSTEM
CONFIDENTIAL AND PROPRIETARY DOCUMENT
ANY ONE OR MORE OF THE FOLLOWING
PATENTS MAY APPLY
U.S PATENT NO. 5,303,669 5,775,835
6,449,790 AND 6,895,622 B2
C.D.N. PATENT NO. 2,032,532 2,070,984
ADDITIONAL PATENTS PENDING.
Ⓓ KENNETH E. SZEKELY

MATERIAL LIST

ITEM	DESCRIPTION	PART NO.	QT'Y
1	ADVANTAGE TILE	ATS-C-2x3	1

0	17/01/07	ISSUED	K.S.
	DATE	REVISION	APPR.

No. SCALE: N.T.S

DESIGNED	BY K.E.S.	DATE 10/04
DRAWN	A.M	17/01/07
CHECKED		
PROJECT MANAGER		
TRADE DETECTABLE WARNING SURFACE	PART NO. ATS-C-2x3	
MATERIAL STAINLESS STEEL		

Advantage Tactile Systems™

TACTILE TILE
DETECTABLE WARNING
SURFACE SYSTEM

PROJECT

ADVANTAGE TACTILE SYSTEMS™
TACTILE TILE
DETECTABLE WARNING
SURFACE SYSTEM
24" x 36"
CAST IN PLACE TILE (INLINE DOME)
PLANS AND DETAILS

DRAWING NO.	REV. NO.
ATS-C-2x3	0